DUNAVOX

Wine Cooler

U F

DX-17.58 DBK/DP
DX-17.58 SDSK/DP
DX-19.58 BK/DP
DX-19.58 SSK/DP

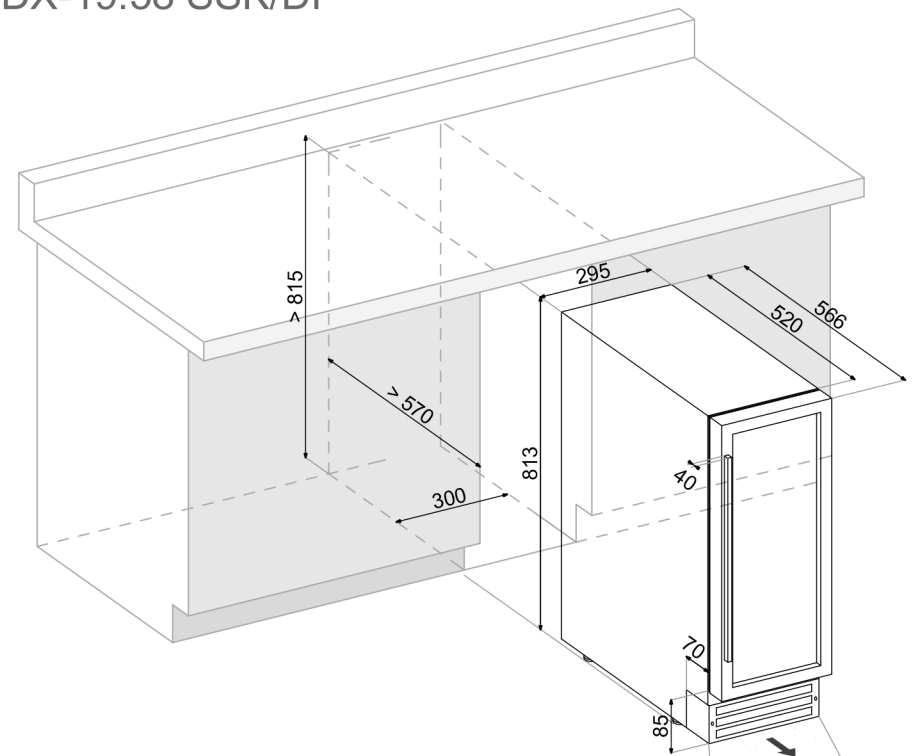

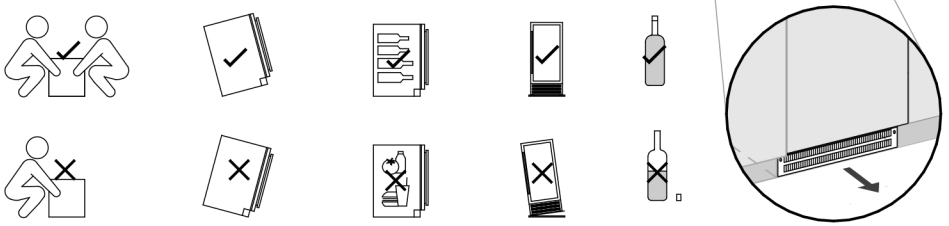

2017.03.01. Copyright Dunavox Kft. All rights reserved. www.dunavox.com

DUNAVOX

Wine Cooler

U F

DX-17.58 DBK/DP
DX-17.58 SDSK/DP
DX-19.58 BK/DP
DX-19.58 SSK/DP

Front View

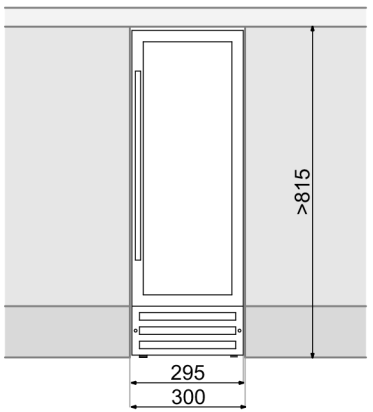

Side View

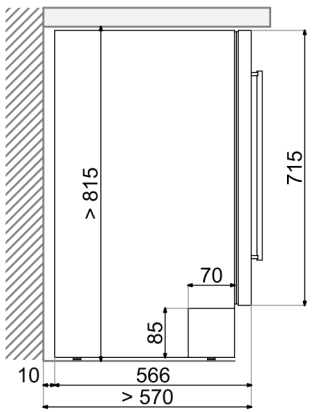

Top View

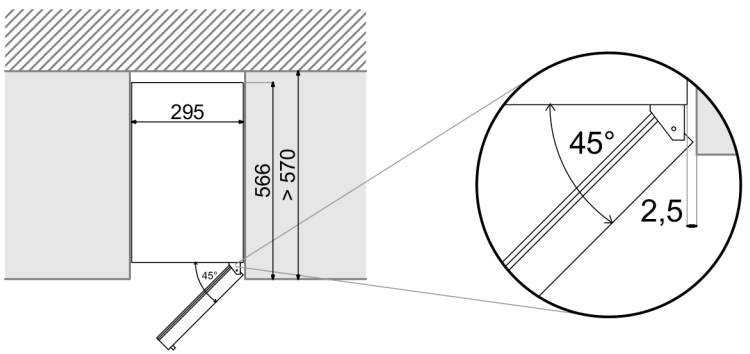

2017.03.01. Copyright Dunavox Kft. All rights reserved. www.dunavox.com